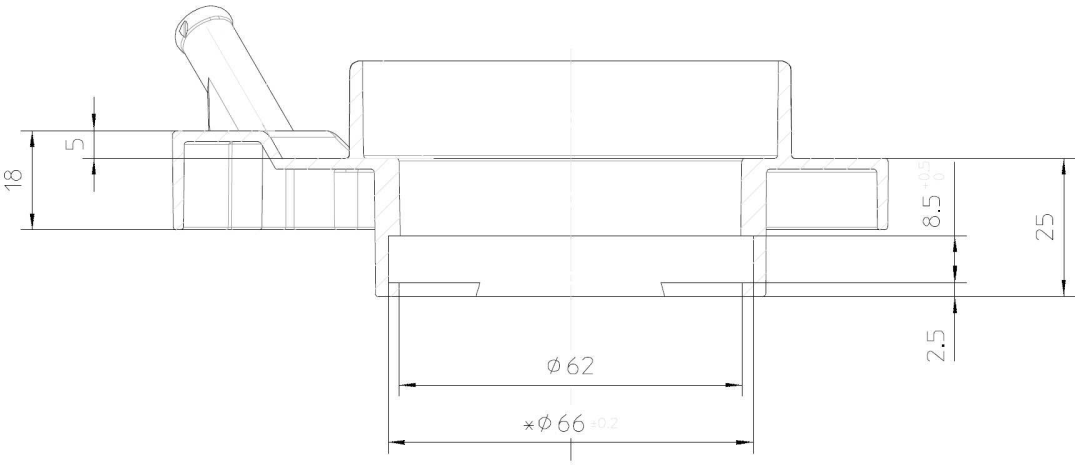
18
5
8.5
25
2.5
ϕ62
*ϕ66

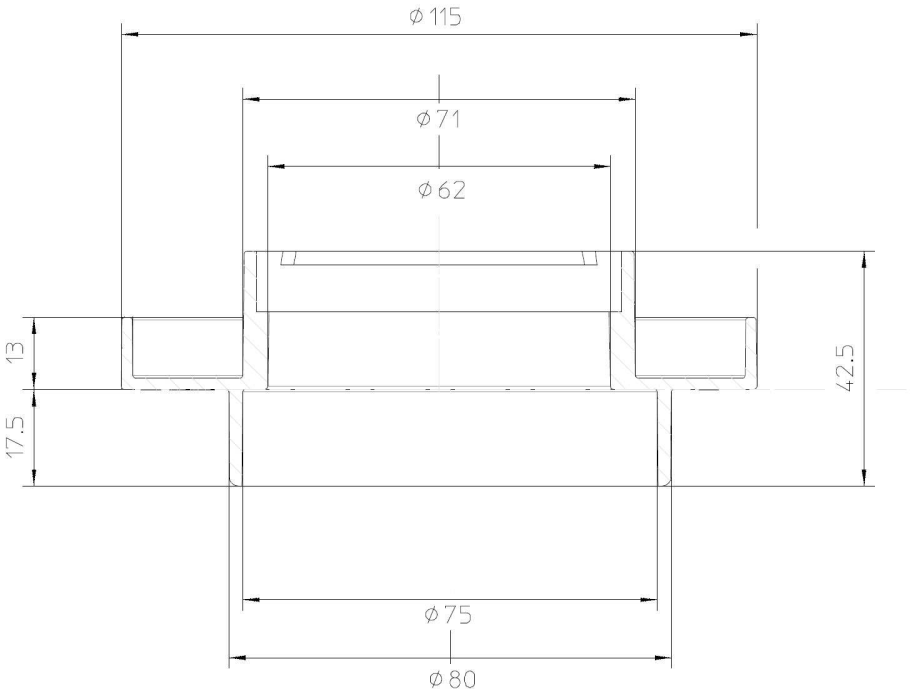
ϕ115
ϕ71
ϕ62
13
17.5
42.5
ϕ75
ϕ80

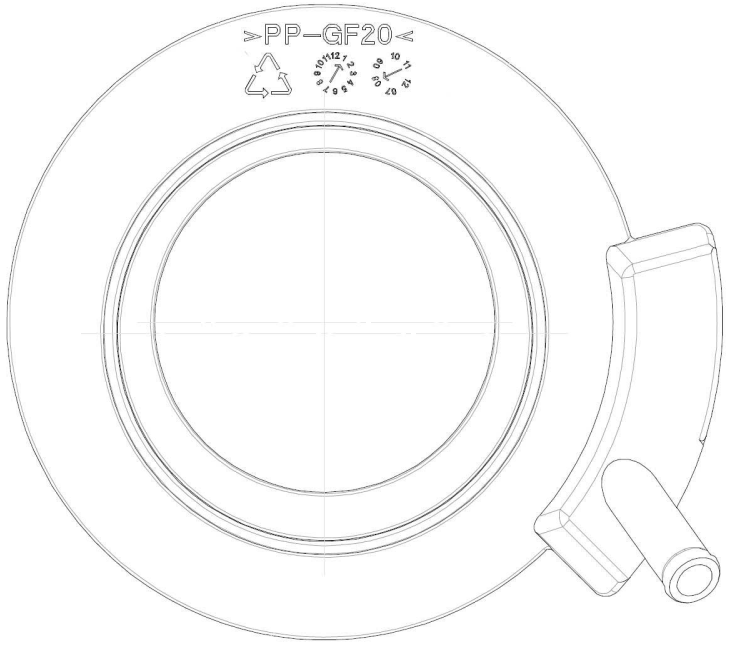
>PP-GF20<

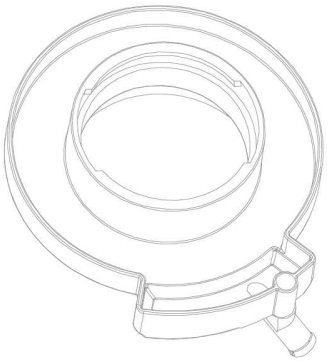

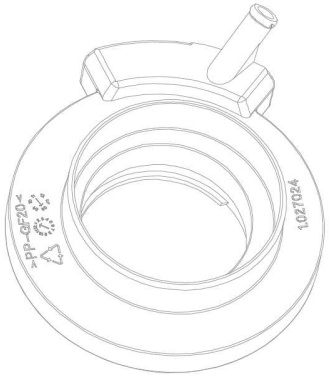
>PP-GF20<
1.027024

cod. 1.027024