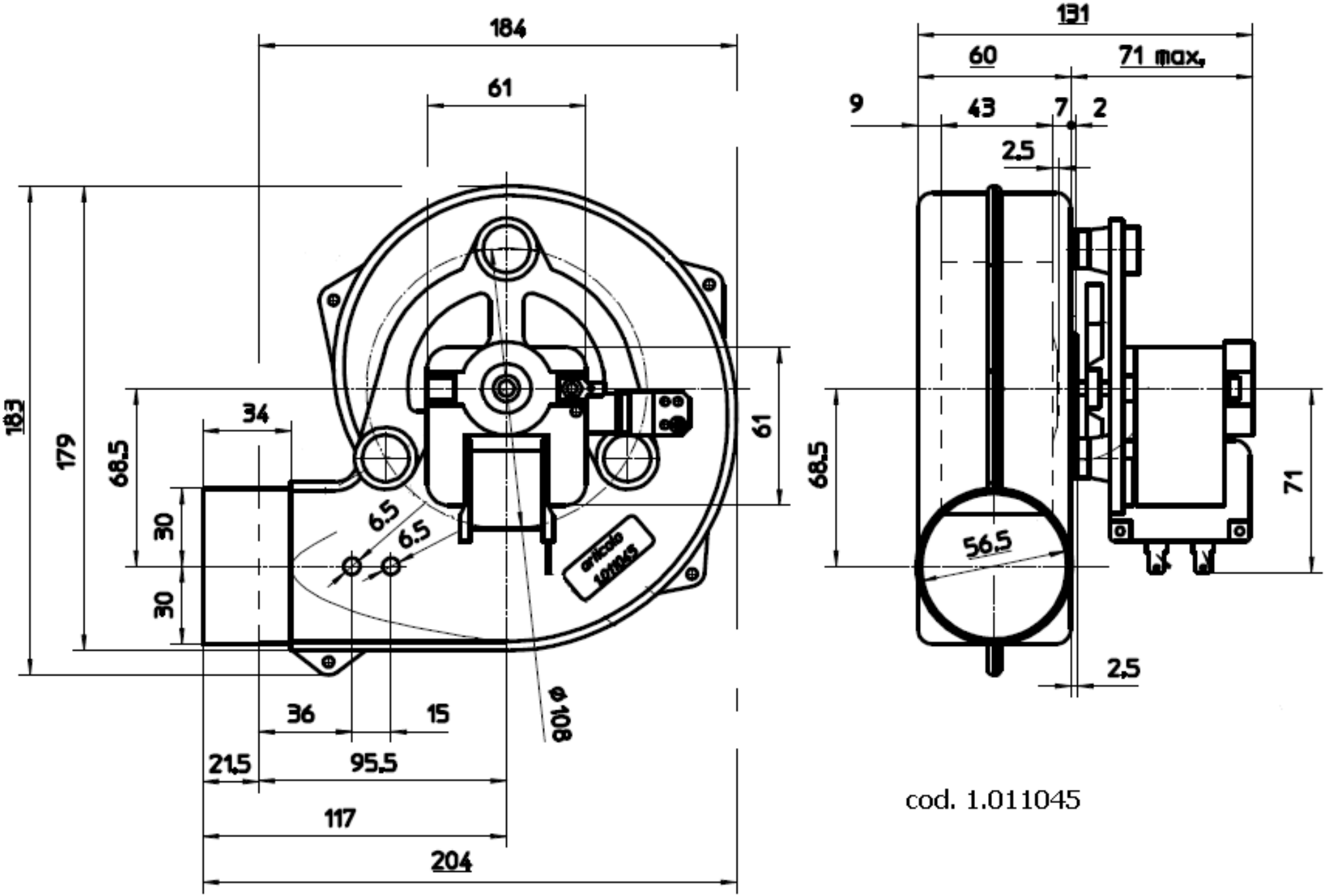
184
61
183
179
68.5
34
30
30
6.5
6.5
61
articolo 1.011045
ø 108
36
15
21.5
95.5
117
204
131
60
71 max.
9
43
7
2
2.5
68.5
56.5
71
2.5

cod. 1.011045